Underground Supply Inc.
574 Haydenville Road
Leeds, MA 01053
Phone: 413-584-5255
Toll Free: 800-350-5055
Fax: 413-584-9763
www.undergroundsupplyinc.com

1500 Gallon Mid-Seam Double Compartment Tank
Item# ST-1500-2C

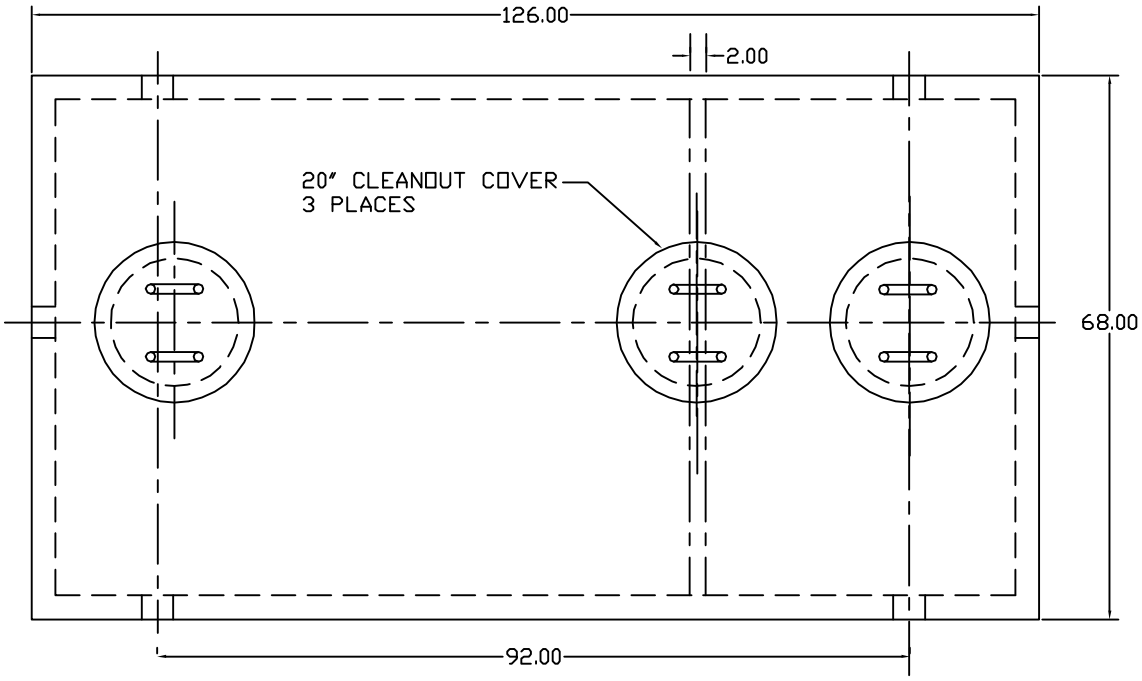

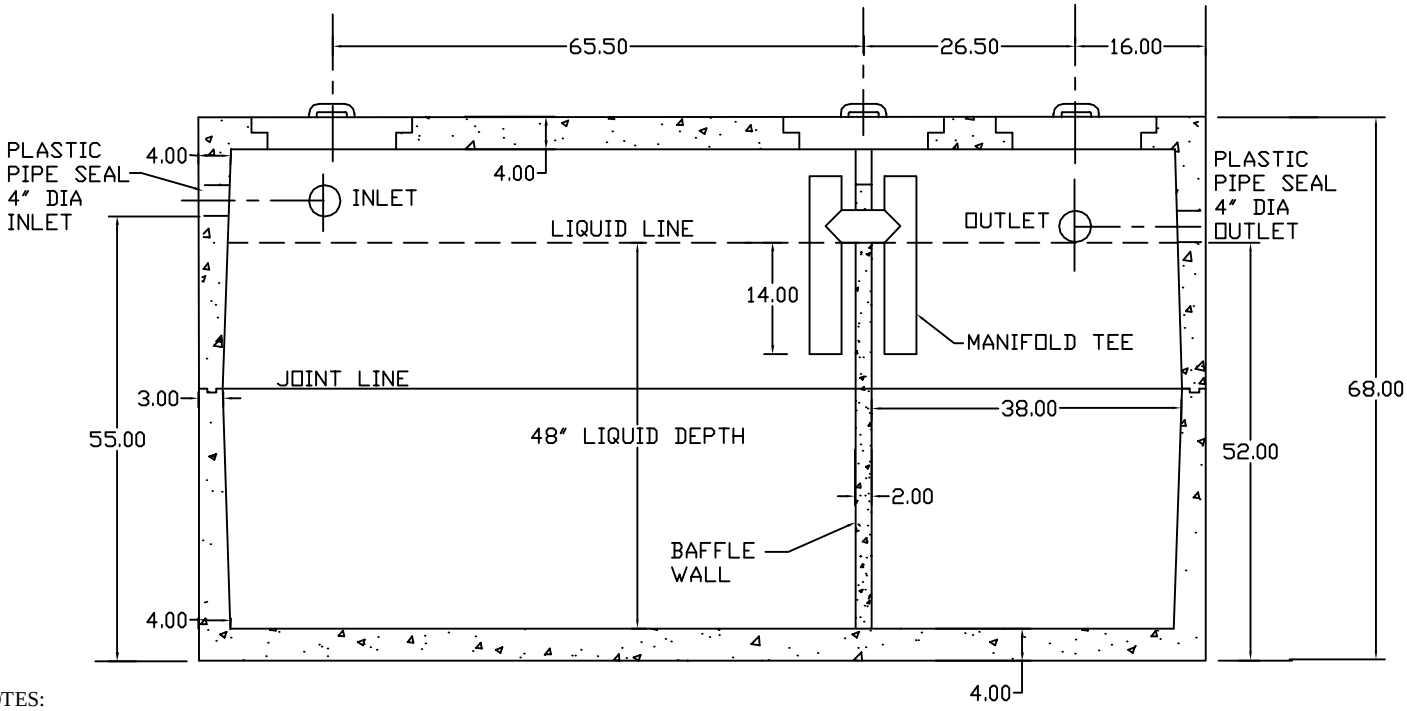

NOTES:
- CONCRETE: 4,000 PSI MINIMUM AFTER 28 DAYS
- REINFORCED STEEL CONFORMS TO LATEST ASTM SPECIFICATION
- 20" MANHOLES ACCEPT U.S.I. 20" x 12" RISER AND TUFF-TITE 20" RISERS
- TANK WEIGHT = 12,930 LBS TOTAL
- TEES AND BAFFLE SOLD SEPARATELY
- TONGUE & GROOVE JOINT SEALED WITH BUYTL RESIN